E	Est. Wind	Actual Wind	Call	Score
A				
B				
1				
2				
3				
4				
5				
6				
7				
8				
9				
10				
11				
12				
13				
14				
15				

Score	
Score Brought Forward	
Aggregate	

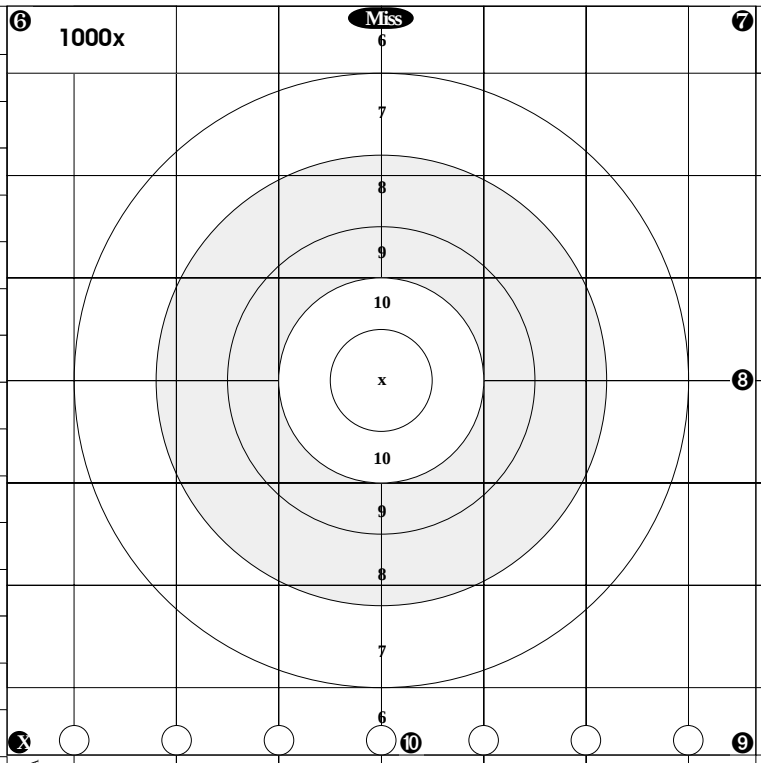

A B 1 2 3 4 5 6 7 8 9 10 11 12 13 14 15

A B 1 2 3 4 5 6 7 8 9 10 11 12 13 14 15

Rifle	
Ammo.	
Foresight	
Start Time	
End Time	

E	Est. Wind	Actual Wind	Call	Score
A				
B				
1				
2				
3				
4				
5				
6				
7				
8				
9				
10				
11				
12				
13				
14				
15				

Score	
Score Brought Forward	
Aggregate	

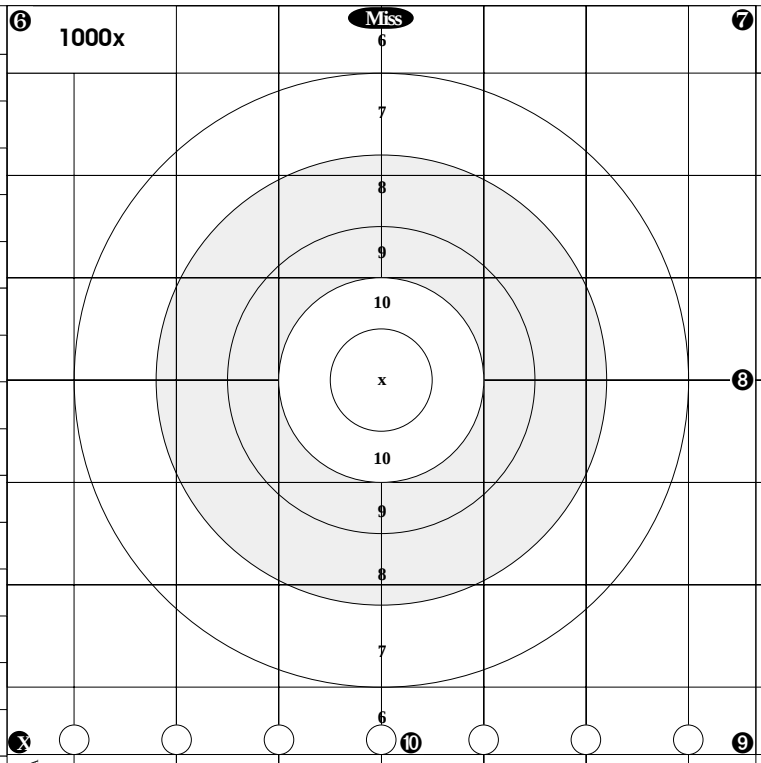

A B 1 2 3 4 5 6 7 8 9 10 11 12 13 14 15

A B 1 2 3 4 5 6 7 8 9 10 11 12 13 14 15

Rifle	
Ammo.	
Foresight	
Start Time	
End Time	