Adj. F/S		E	Est. Wind	Actual Wind	Call	Score
	A					
	B					
	1					
	2					
	3					
	4					
	5					
	6					
	7					
	8					
	9					
	10					
	11					
	12					
	13					
	14					
	15					

Foresight	Time	Score	

DCRA Diagram © Home Cottage Computers 2k

300m

Target

A B 1 2 3 4 5 6 7 8 9 10 11 12 13 14 15

Approx. Rise 300x-300m, .75′

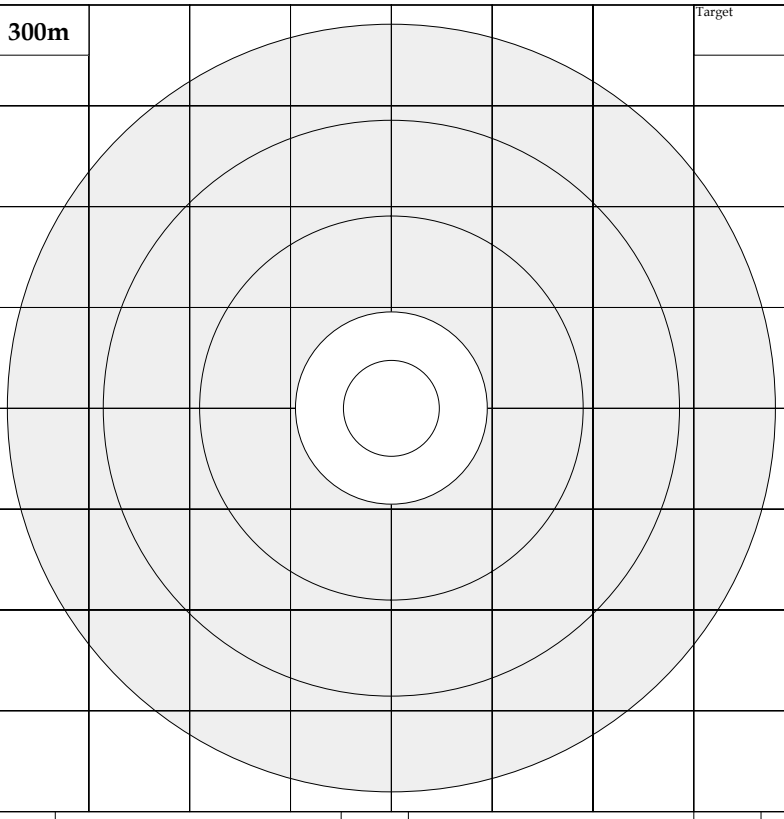

Comp.		Coach		Rifle	
Date		Ammo.		Barrel Count	

Adj. F/S		E	Est. Wind	Actual Wind	Call	Score
	A					
	B					
	1					
	2					
	3					
	4					
	5					
	6					
	7					
	8					
	9					
	10					
	11					
	12					
	13					
	14					
	15					

Foresight	Time	Score	

DCRA Diagram © Home Cottage Computers 2k

300m

Target

A B 1 2 3 4 5 6 7 8 9 10 11 12 13 14 15

Approx. Rise 300x-300m, .75′

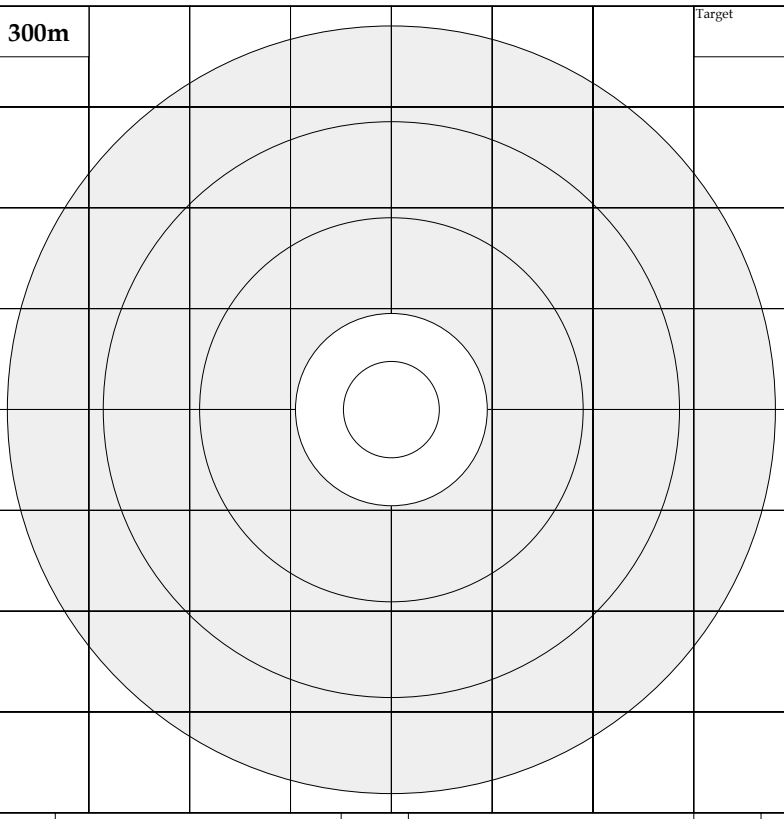

Comp.		Coach		Rifle	
Date		Ammo.		Barrel Count	